Model Name: 1-WAY PB VALVE
Model No: VE.110

Pure **Quality**. Pure **Design**.

Before you begin:

- Please take note of different standards and regulations that are dictated by your local plumbing codes. This product is certified in accordance with North American building codes.
- We insist that you use the services of a professional plumber with experience in the installation of similar fixtures.
- Ensure that the piping system is well secured to prevent rattling, vibration and banging noises caused by a water hammer. We also recommend that you use water hammer arrestors.
- Ensure that the interior of the water pipes is clean from debris, sand, solder and any other residue.
- Always remove cartridges and other valve components before welding. Purge the water supply system for around 30 seconds, and then carefully reinstall the cartridges.

Tools and equipment you will need:

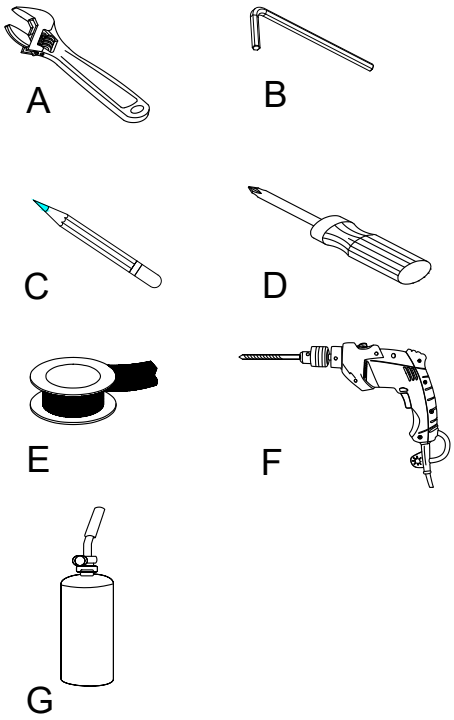

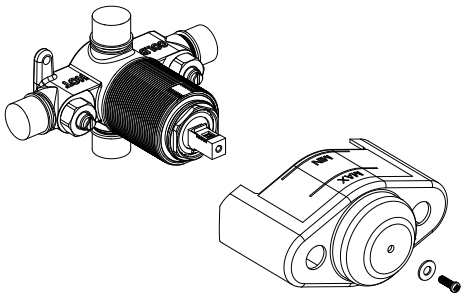

Waterway diagram:

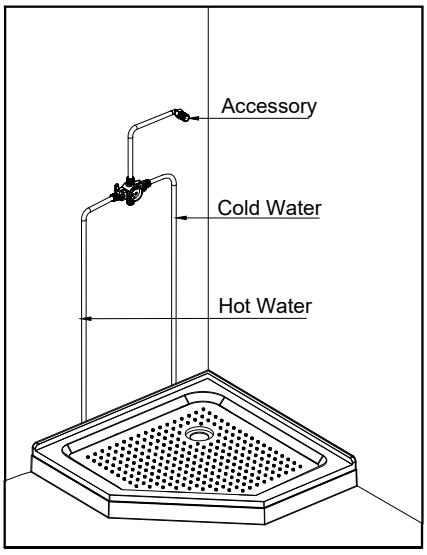

Valve Operating Diagram:

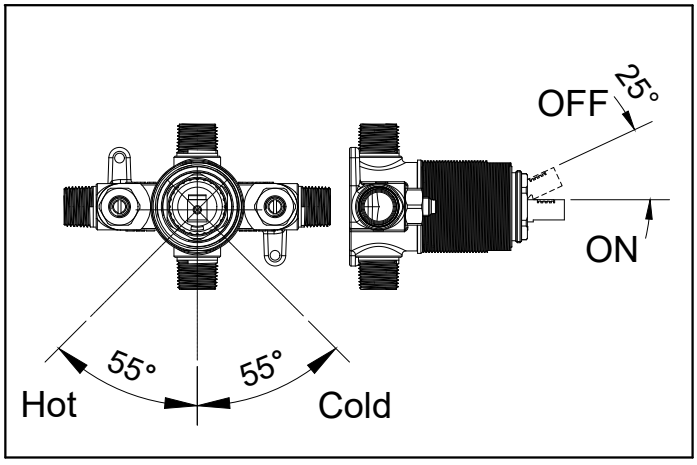

1

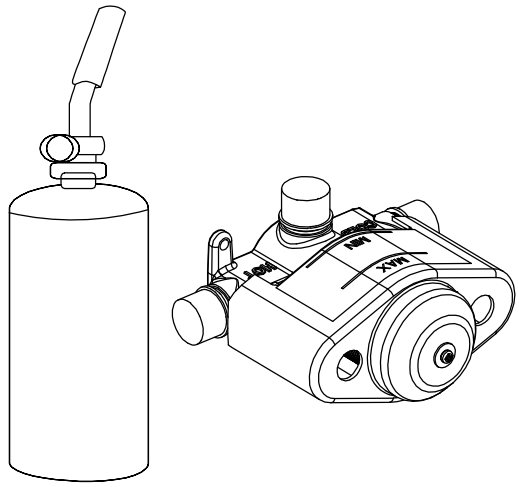

2

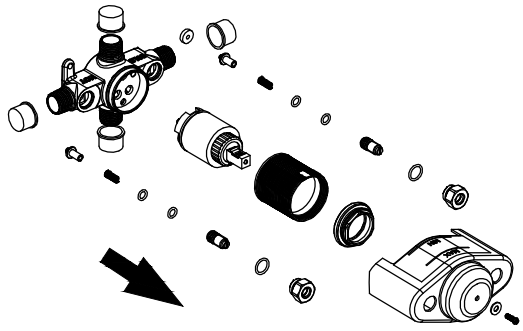

If welding is involved you must remove internal valve components prior to the welding.
Please note the original position of the cartridge.

3

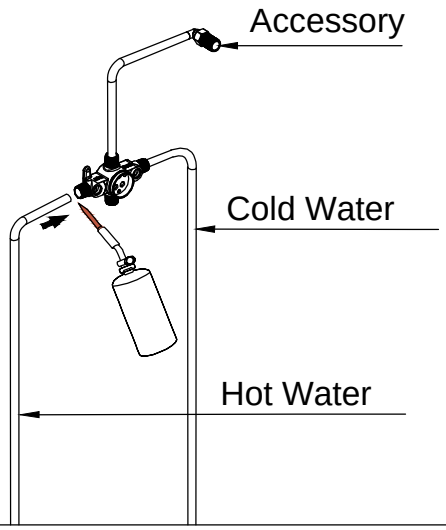

4

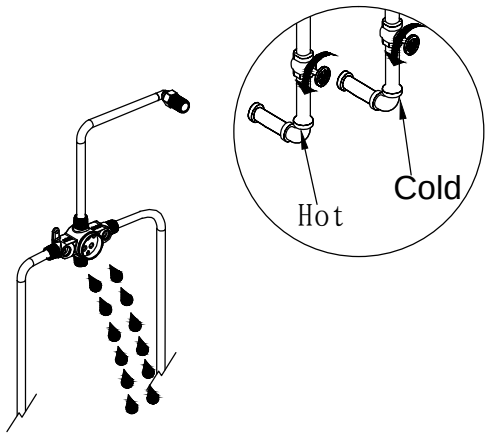

Once the welding is finished, purge the water supply system for around 30 seconds.

5

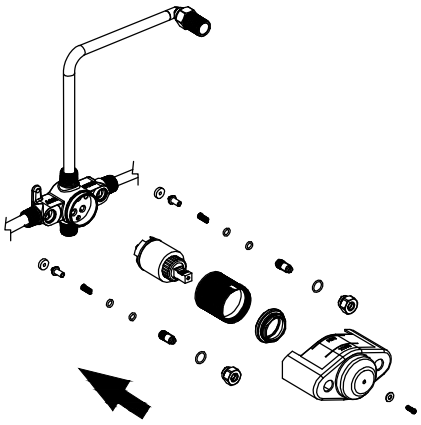

Reinstall the valve components into their original positions.
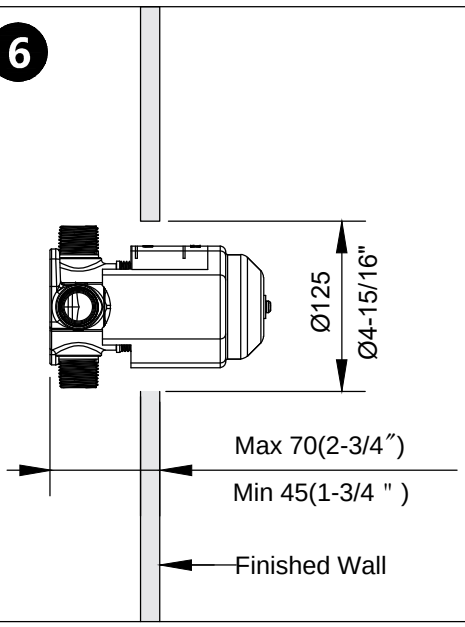
6